LCS
Laser Control Solutions

2013 - 2014
Self Leveling Mill Head

Project Description

Team Laser Control Solutions (LCS) worked alongside Mactech On-Site Machining Solutions to develop and test a real-time self-leveling system for their Large Diameter Facing Machine (LDFM). The LDFM is used to machine large diameter flanges (6'-18') for the oil, marine, and power industries. The goal of this project was to reduce overall machining tolerances from .015" to .005" using a laser measurement system and a custom designed control loop.

Control Loop

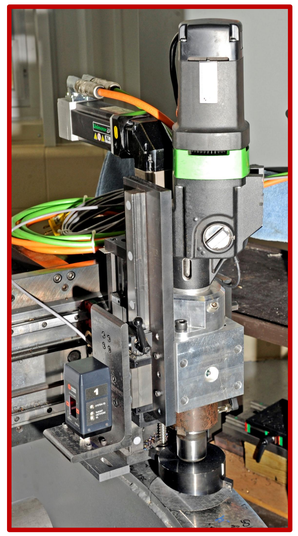

The designed control loop implements a high-precision laser , servo motor and ball-screw to make continuous height adjustments. The system is capable of adjustments as small as .001".

The desired milling plane is entered into the human machine interface before starting the control loop. The motion controller takes a reading from the laser and then adjusts the servo motor to keep the mill head in the desired plane. The new modified mill head assembly is adjusted by turning a precision ball screw. Once the adjustment has been made the motion controller takes a new laser measurement and repeats the control loop until milling is finished.

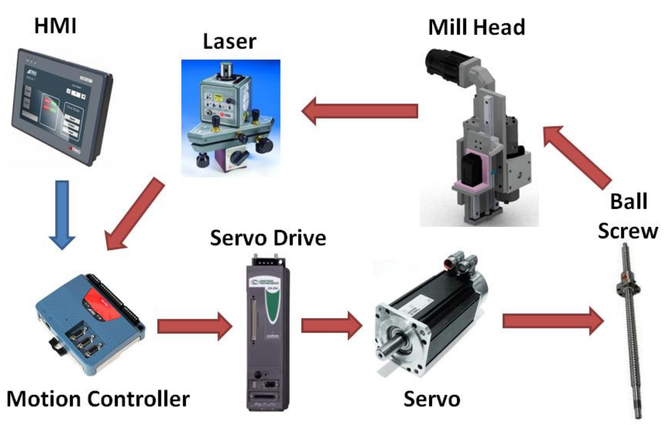

Team Members:

Jacob Clark, Eric Stephan (Computer Eng.)
Logan Cowley, Josh Houska (Mechanical Eng.)
Steve Jacobs (Electrical Eng.)

Faculty Advisor:

Dr. David Baumann (Professor)

Industrial Contacts:

Joel Wittenbraker (Owner)
Paul Ruhlach (Manufacturing Eng.)
Sam Schammel (Technical Services Manager)
Dave Wenzel (Mechanical Eng.)

SSMART · TRIO MOTION TECHNOLOGY · HAMAR LASER · LAKE SUPERIOR STATE UNIVERSITY

Human Machine Interface

A Human Machine Interface (HMI) was created so that operators could use the laser system in either manual or automatic control loop mode. Two separate screens are used, one for each operating mode. Both screens show information about the detector, including vertical height.

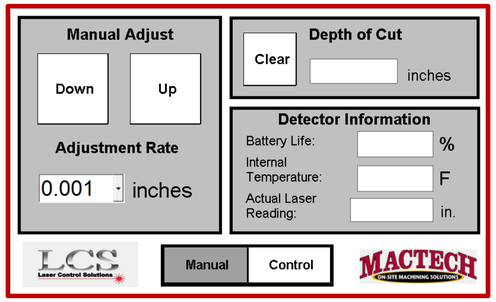

Manual mode allows for the operator to manually move the mill head up or down. Depth of Cut keeps a running sum of the total movement.

Control mode implements the laser in a feedback loop to automatically maintain .005" tolerance.

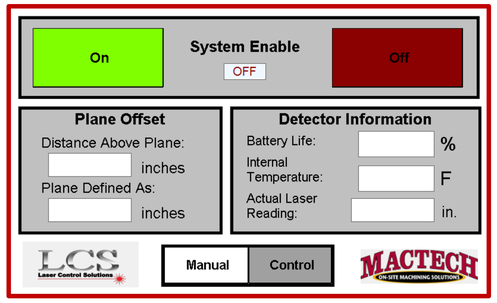

Electrical System

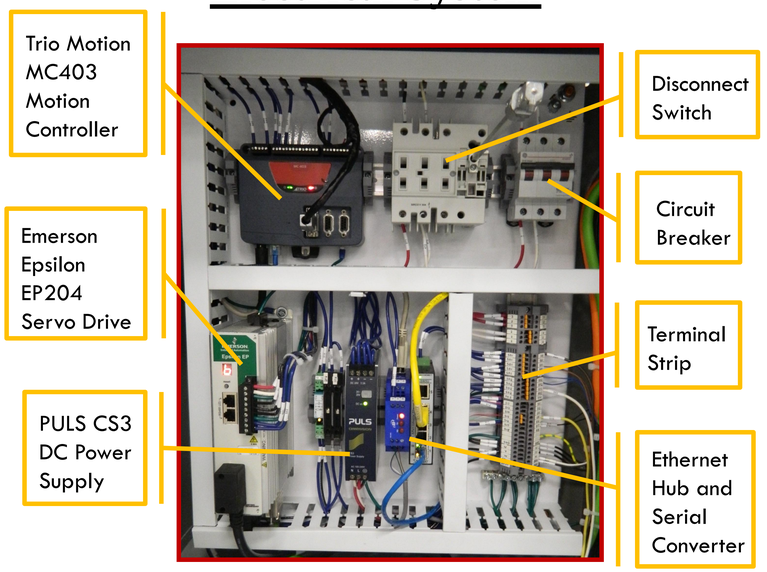

MACTECH
ON-SITE MACHINING SOLUTIONS